Data Sheet

Accessories

Contents

	Page
History Revision	2
Nuts	3
Screws	5
Solder Lug	6
Screwdriver	6
Mounting Device for PJ 88/185, DCU 193/254 Knobs	7
Stepped Drill Bits	8
Clothing Clip	9

Accessories specific to only one component type can be found in the Data Sheet for the relevant component.

All materials comply with RoHS directive (2002/95/EC) RoHS 2002/95/EC

Sonion reserves the right to make changes at any time to improve reliability, function or design, in order to provide the best product possible.

History Revision

Revision Number/Date	Change from last revision
07 / Oct. 02	History Revision added. Screw driver and mounting device for SW 96/97 has been updated. New item no. for screw driver
08 / Aug. 05	Silver plating replaced by gold plating Mounting device for knob No. 101 added
09 / Jan. 06	Ordering code on mounting device for knob No. 101 corrected
MT1000.I (07/08)	No technical updates
MT1000.J (02/09)	Nut No. 25, Screw No. 03 and No. 05 removed
010/JUL-22-2009	No technical updates

Nuts

No. 01

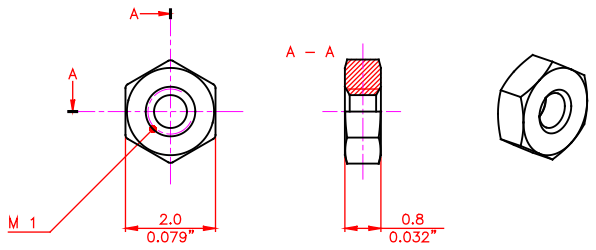

Ordering Code Nos.:

Nickel-plated	0010-1027759
Gold-plated	0010-1027760

No. 02

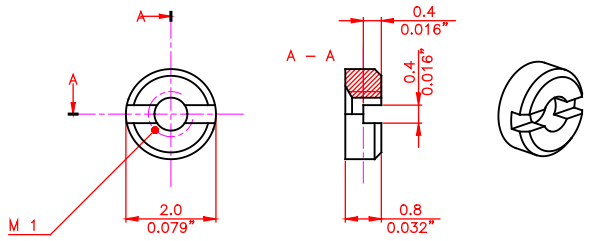

Ordering Code Nos.:

Gold-plated	0010-1027762

No. 03

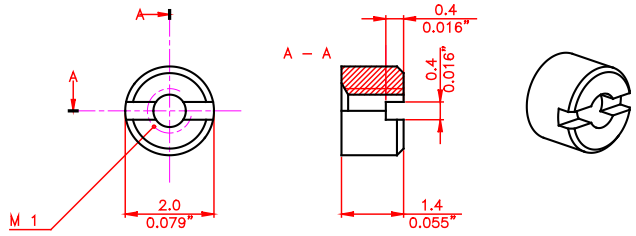

Ordering Code Nos.:

Gold-plated	0010-1027764

No. 04

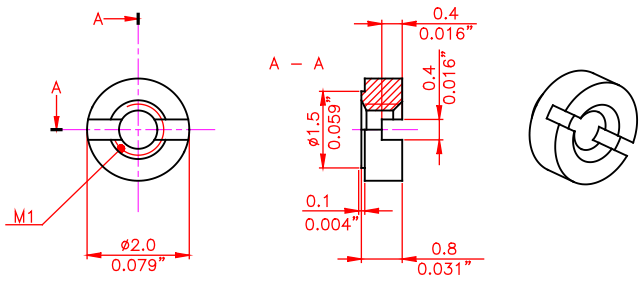

Ordering Code No.:

Gold-plated	0010-2000332

Screws

No. 01

For use with SA 12, SA 13 and SA 15

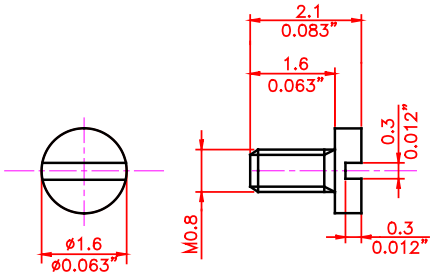

Ordering Code No.:
0010-1027239

No. 02

For use with SA 12, SA 13 and SA 15

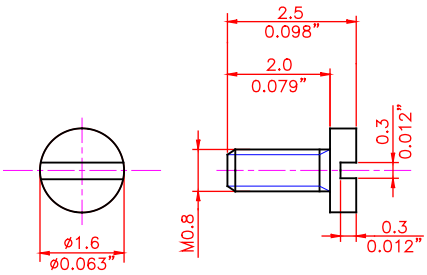

Ordering Code No.:
0010-1027240

Solder Lug

No. 01

Material: Gold-plated German silver
Thickness: 0.15 mm/[0.0006]

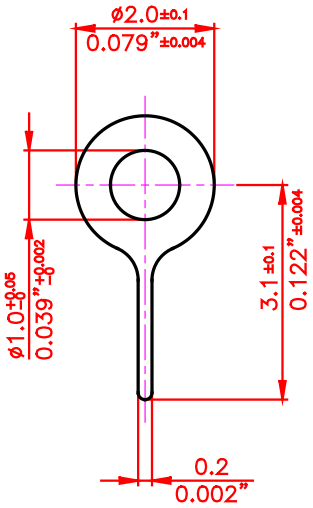

Ordering Code No.:
7710-1027767

Screwdriver

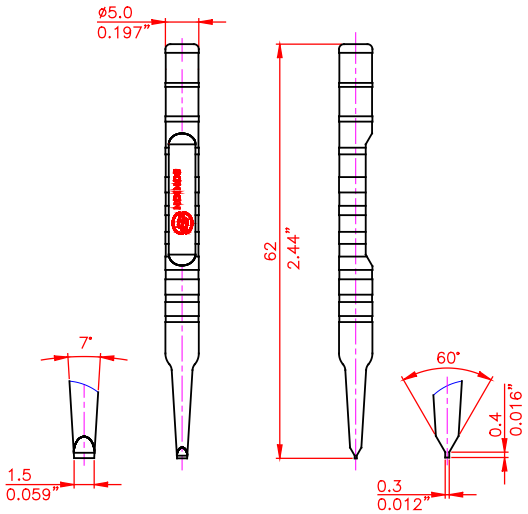

Ordering Code No.:
0010-2002654

Material: PA 6.6

Mounting Device for PJ 88/185, DCU 193/254 Knobs

Material: PA 6.6

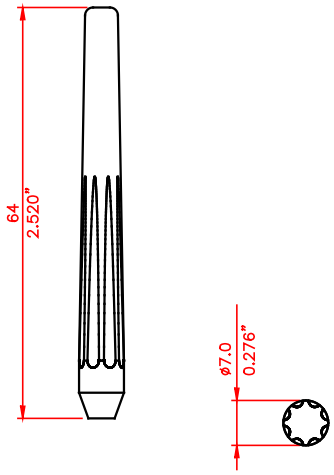

Application	For Mounting of	Ordering Code
PJ 88	Knob Nos. 03 and 13	8810-1027771
	Knob No. 05	8810-1027772
	Knob Nos. 06 and 07	8810-1027773
	Knob No. 09	8810-1027774
	Knob Nos. 01, 04, 10 and 11	8810-1027775
	Knob Nos. 21, 22 and 23	8810-1027776
	Knob No. 55	8810-1027777
	Knob Nos. 15 and 16	8810-3008880
	Knob Nos. 28 and 29	8810-1027781
PJ 185 and DCU 254	Knob No. 101	0010-3008745

Stepped Drill Bits

For mounting of various components in faceplates.

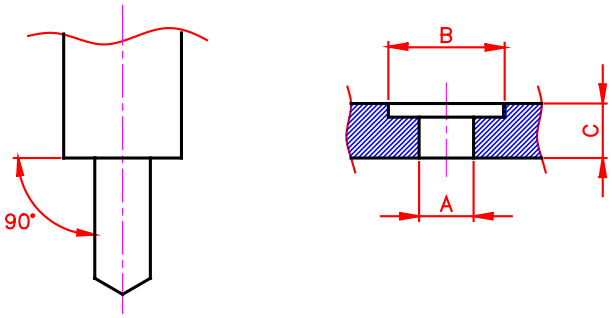

A: Housing diameter
B: Flange diameter
C: Faceplate thickness (max.)

Application	Dimension			Ordering Code
	A [mm]	B [mm]	C [mm]	
PJ 62/63 and PB 100	1.90	2.30	3.00	0010-1027234
PJ 12-18, PB 95 and SW 96/97	2.55	3.15	3.00	0010-1027235
PJ 87/88, DCU 93/193 and SW 511	3.85	4.00	3.00	0010-1027236
PJ 87/88 and DCU 93/193	3.85	5.00	3.00	0010-1027237
PJ 87/88 and DCU 93/193	3.85	6.20	3.00	0010-1027238
PJ 85/185 and DCU 254	2.54	3.40	3.00	0010-3007048

Clothing Clip

The clothing clip is used for strain relief of programming cables.

Material: ABS

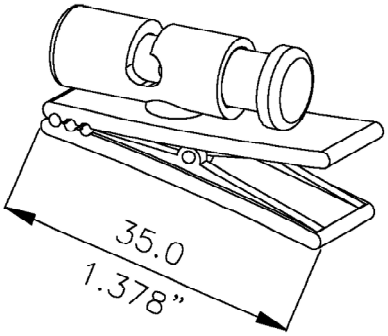

Ordering Code Nos.:

Black	4410-1039480
Red	4410-1043421
Blue	4410-1043422